6. **REMOVE STUD BOLT**
   (a) Using "TORX" socket wrenches E5 and E7, remove the 11 stud bolts.

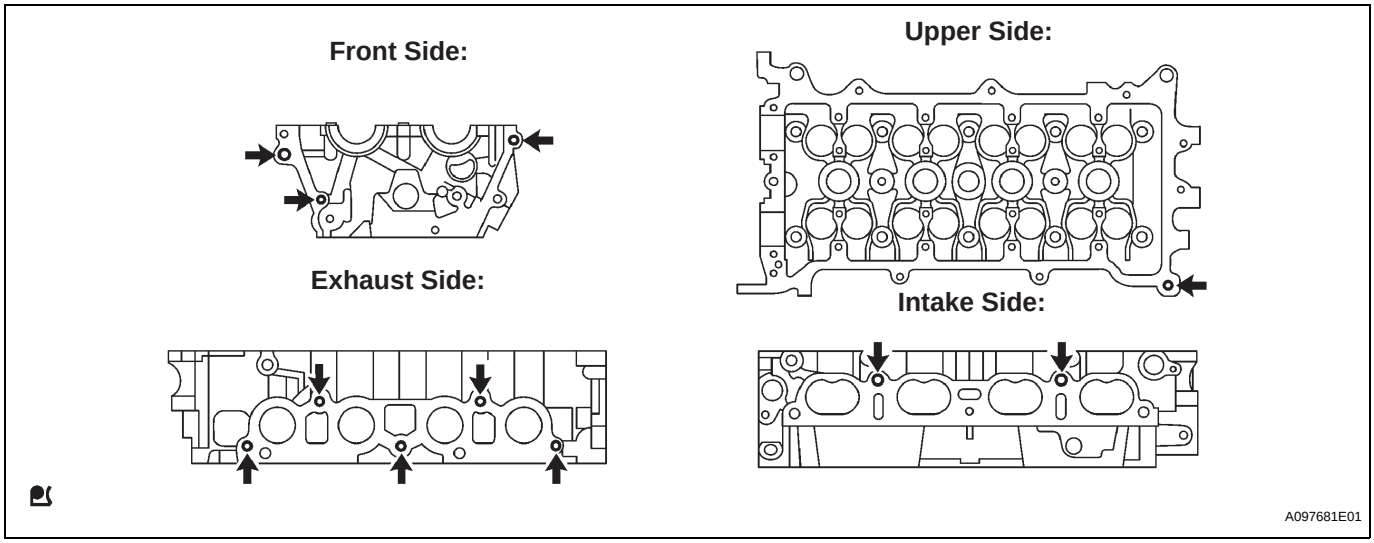

INSPECTION

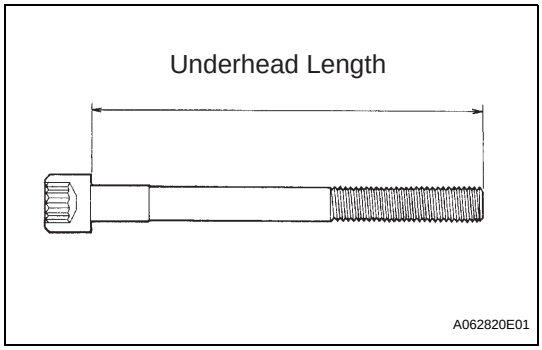

1. **INSPECT CYLINDER HEAD SET BOLT**
   (a) Using vernier calipers, measure the length of the cylinder head bolts from the seat to the end.
   Standard length:
   146.8 to 148.2 mm (5.780 to 5.835 in.)
   Maximum length:
   148.5 mm (5.846 in.)
   If the bolt length is greater than maximum, replace the cylinder head set bolt.

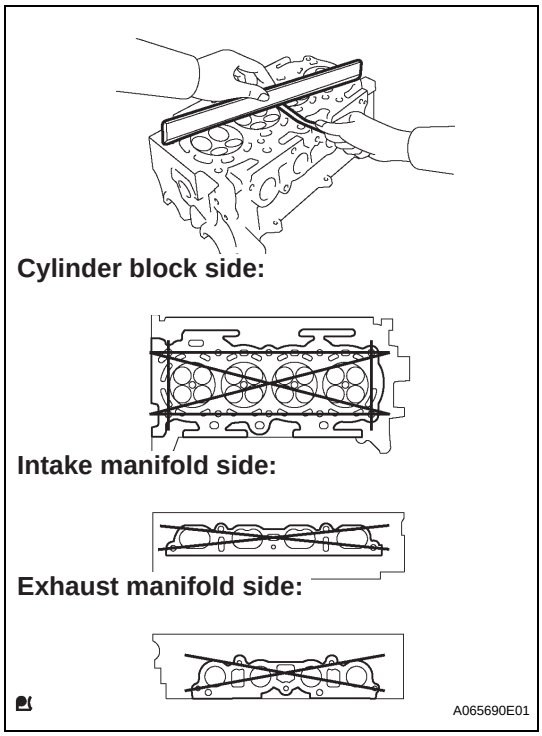

2. **CHECK CYLINDER HEAD FOR FLATNESS**
   (a) Using a precision straight edge and a feeler gauge, measure the surface that is in contact with the cylinder block and the manifolds for warpage.
   Maximum warpage:
   Cylinder block side:
   0.05 mm (0.0020 in.)
   Intake manifold side:
   0.10 mm (0.0039 in.)
   Exhaust manifold side:
   0.10 mm (0.0039 in.)
   If the warpage is greater than maximum, replace the cylinder head.

cardiagn.com

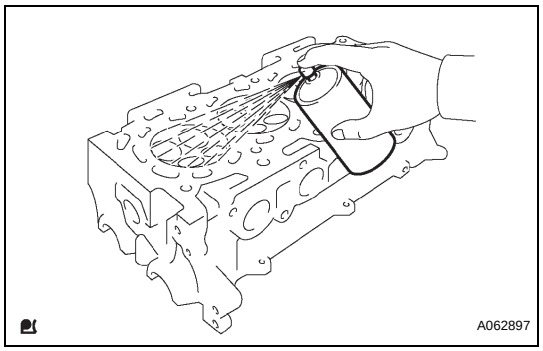

3. CHECK CYLINDER HEAD FOR CRACKS

(a) Using a dye penetrate, check the combustion chamber, intake ports, exhaust ports and cylinder block surface for cracks.
If cracked, replace the cylinder head.

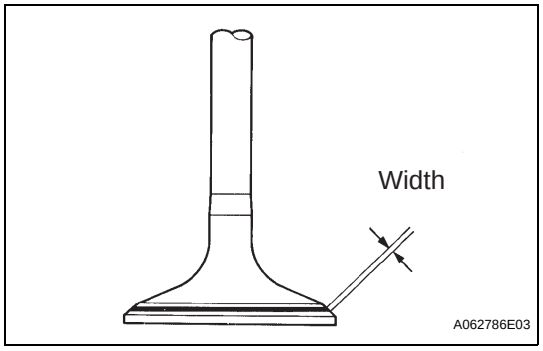

4. INSPECT VALVE SEATS

(a) Apply a light coat of prussian blue to the valve face.
(b) Lightly press the valve against the seat.
NOTICE:
Do not turn the valve.
(c) Check the valve face and seat in accordance with the following procedure.
(1) If blue appears 360° around the face, the valve is concentric. If not, replace the valve.
(2) If blue appears 360° around the valve seat, the guide and face are concentric. If not, resurface the seat.
(3) Check that the seat contact is in the middle of the valve face with a width of 1.0 to 1.4 mm (0.039 to 0.055 in.).

5. REPAIR INTAKE VALVE SEATS

NOTICE:
Releasing the seat cutter pressure makes the valve seat faces smoother.

(a) Using a 45° cutter, cut the valve face of the cylinder head a little wider than the specified valve seating width.
(b) Confirm that the valve fits the valve seat center portion. If not, re-cut the valve face with the 45° cutter.

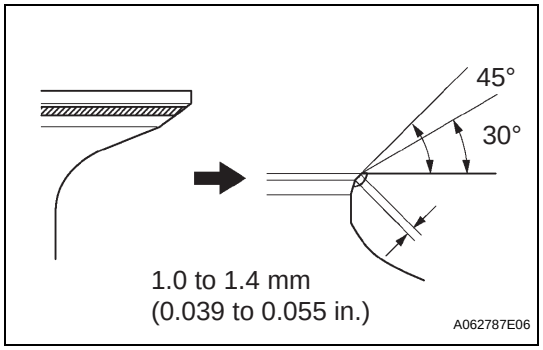

(c) Adjust the valve face with a 30° or 60° cutter so that the valve seat is in the valve seat center portion.
(1) If the seating is too high on the valve face, use the 30° and 45° cutters to correct the seat.

EM

cardiagn.com

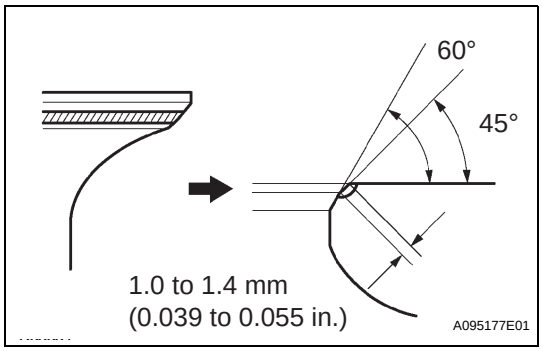

(2) If the seating is too low on the valve face, use the 60° and 45° cutters to correct the seat.

(d) Lap the valve and valve seat with an abrasive compound. Do this work by hand.

(e) Recheck the valve seating position.

6. REPAIR EXHAUST VALVE SEATS

NOTICE:

Releasing the seat-cutter pressure gradually make the valve seat faces smoother.

(a) Using the 45° cutter, cut the valve face of the cylinder head a little wider than the specified valve seating width.

(b) Confirm that the valve fits the valve seat center portion. If not, re-cut the valve face with the 45° cutter.

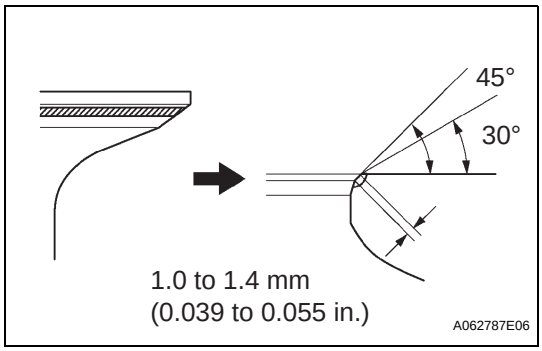

(c) Adjust the valve face with the 30° or 75° cutter to accurately fit the valve seat center portion.

(1) If the seating is too high on the valve face, use the 30° and 45° cutters to correct the seat.

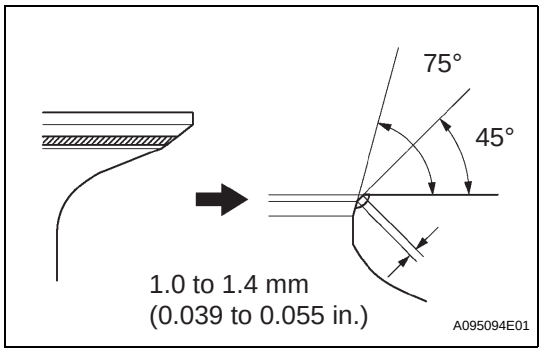

(2) If the seating is too low on the valve face, use the 75° and 45° cutters to correct the seat.

(d) Lap the valve and valve seat with an abrasive compound. Do this work by hand.

(e) Recheck the valve seating position.

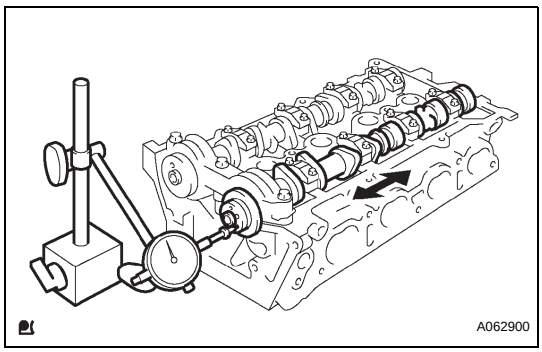

7. CHECK CAMSHAFT THRUST CLEARANCE

(a) Install the 2 camshafts.

(b) Using a dial indicator, measure the thrust clearance while moving the camshaft back and forth.

Standard thrust clearance:
0.040 to 0.095 mm (0.0016 to 0.0037 in.)

Maximum thrust clearance:
0.110 mm (0.0043 in.)

- If the thrust clearance is greater than maximum, replace the cylinder head.
- If damages are found on the camshaft thrust surfaces, replace the camshaft.

EM

cardiagn.com

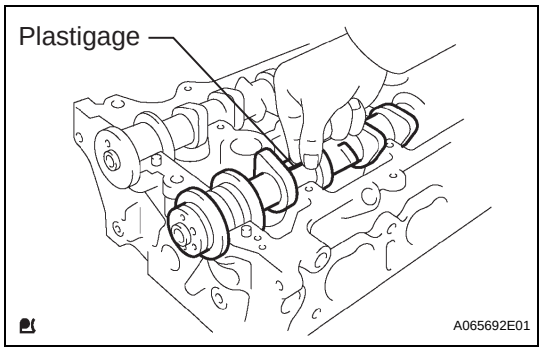

8. CHECK CAMSHAFT OIL CLEARANCE

(a) Clean the 9 bearing caps and camshaft journals.
(b) Place the camshafts on the cylinder head.
(c) Lay a strip of Plastigage across each of the camshaft journal.
(d) Install the 9 bearing caps (See page EM-94).
NOTICE:
Do not turn the camshaft.
(e) Remove the 9 bearing caps (See page EM-86).

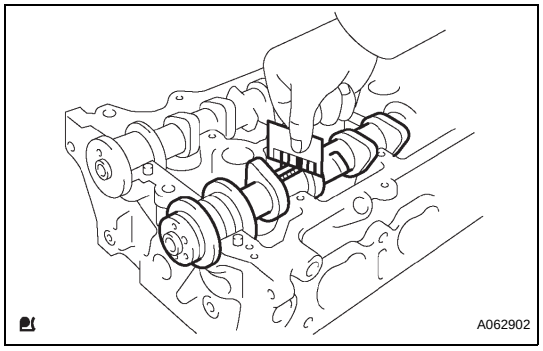

(f) Measure the Plastigage at its widest point.
Standard oil clearance:
0.035 to 0.072 mm (0.0014 to 0.0028 in.)
Maximum oil clearance:
0.10 mm (0.0039 in.)
NOTICE:
Completely remove the Plastigage after measuring.
If the oil clearance is greater than maximum, replace the cylinder head or the camshaft.

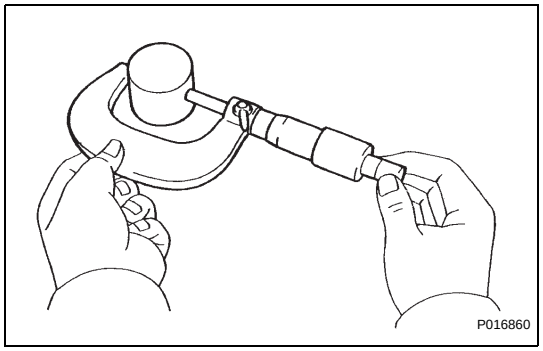

9. INSPECT VALVE LIFTER

(a) Using a micrometer, measure the valve lifter diameter.
Lifter diameter:
30.966 to 30.976 mm (1.2191 to 1.2195 in.)
If the diameter is not as specified, replace the valve lifter.

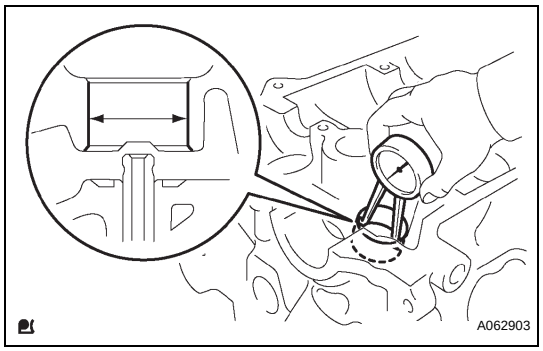

10. CHECK VALVE LIFTER OIL CLEARANCE

(a) Using a caliper gauge, measure the valve lifter bore diameter of the cylinder head.
Lifter bore diameter:
31.000 to 31.025 mm (1.2205 to 1.2215 in.)
If the diameter is not as specified, replace the cylinder head.
(b) Subtract the valve lifter diameter measurement from the valve lifter bore diameter measurement.
Standard oil clearance:
0.024 to 0.059 mm (0.0009 to 0.0023 in.)
Maximum oil clearance:
0.079 mm (0.0031 in.)
- If the oil clearance is greater than maximum, replace the valve lifter.
- If necessary, replace the cylinder head.

EM

cardiagn.com

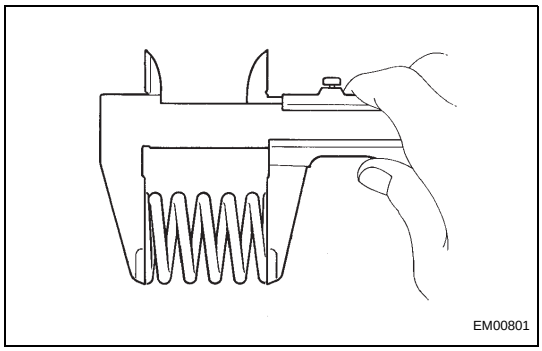

11. INSPECT INNER COMPRESSION SPRING

(a) Using vernier calipers, measure the free length of the inner compression spring.
Free length:
43.40 mm (1.7087 in.)
If the length is not as specified, replace the inner compression spring.

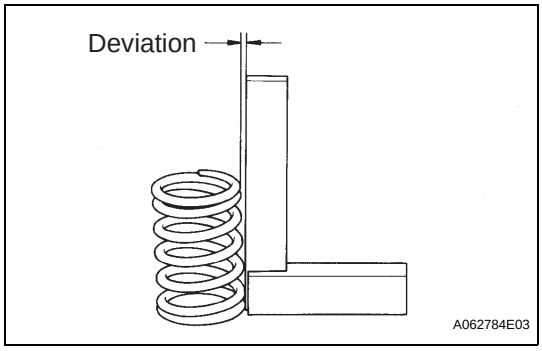

(b) Using a steel square, measure the deviation of the inner compression spring.
Maximum deviation:
1.6 mm (0.063 in.)
Maximum angle (reference):
2°
If the deviation is greater than maximum, replace the inner compression spring.

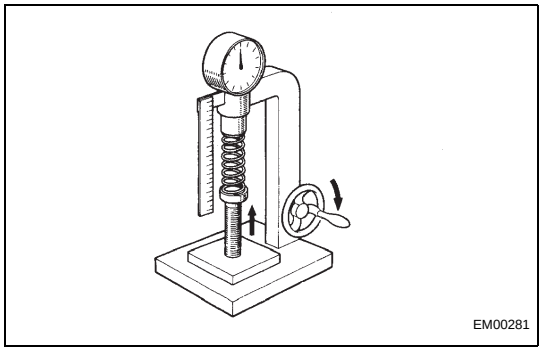

(c) Using a spring tester, measure the tension of the inner compression spring at the specified installed length.
Installed tension:
158.6 to 175.4 N (16.2 to 17.9 kgf, 35.7 to 39.5 lbf) at 33.6 mm (1.323 in.)
Maximum working tension:
335.3 to 370.7 N (34.2 to 37.8 kgf, 75.4 to 83.3 lbf) at 24.1 mm (0.949 in.)
If the installed tension is not as specified, replace the inner compression spring.

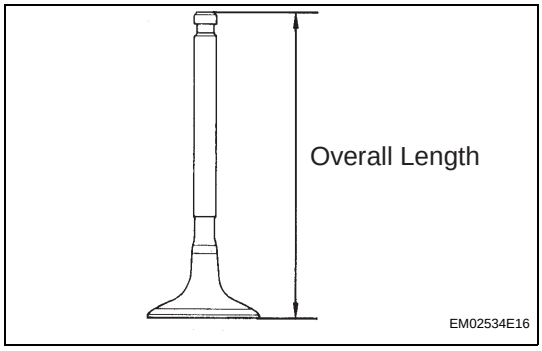

12. INSPECT VALVE

(a) Using vernier calipers, measure the overall valve length.
Standard overall length

Item	Specification
Intake	88.65 mm (3.4902 in.)
Exhaust	88.69 mm (3.4917 in.)

Minimum overall length

Item	Specification
Intake	88.35 mm (3.4784 in.)
Exhaust	88.39 mm (3.4799 in.)

If the overall length is less than minimum, replace the valve.

cardiagn.com

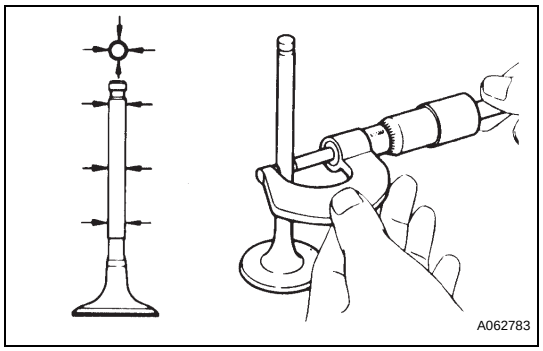

(b) Using a micrometer, measure the diameter of the valve stem.

Valve stem diameter

Item	Specification
Intake	5.470 to 5.485 mm (0.2154 to 0.2159 in.)
Exhaust	5.465 to 5.480 mm (0.2152 to 0.2158 in.)

If the diameter is not as specified, replace the valve.

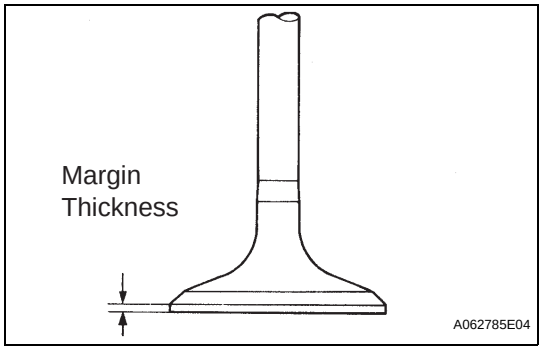

(c) Using vernier calipers, check the valve head margin thickness.

Standard margin thickness:
1.0 mm (0.039 in.)

Minimum margin thickness:
0.7 mm (0.028 in.)

If the margin thickness is less than minimum, replace the valve.

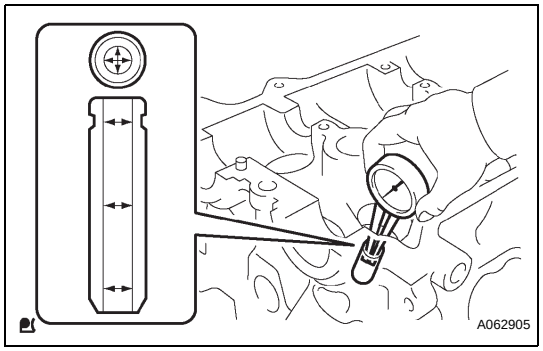

13. CHECK VALVE GUIDE BUSHING OIL CLEARANCE

(a) Using a caliper gauge, measure the internal diameter of the valve guide bushing.

Busing inside diameter:
5.510 to 5.530 mm (0.2169 to 0.2177 in.)

If the internal diameter is not as specified, replace the valve guide bushing.

(b) Subtract the valve stem diameter measurement from the guide bushing internal diameter measurement.

Standard oil clearance

Item	Specification
Intake	0.025 to 0.060 mm (0.0010 to 0.0024 in.)
Exhaust	0.030 to 0.065 mm (0.0012 to 0.0026 in.)

Maximum oil clearance:

Item	Specification
Intake	0.08 mm (0.0032 in.)
Exhaust	0.10 mm (0.0039 in.)

If the oil clearance is greater than maximum, replace the valve and valve guide bushing.

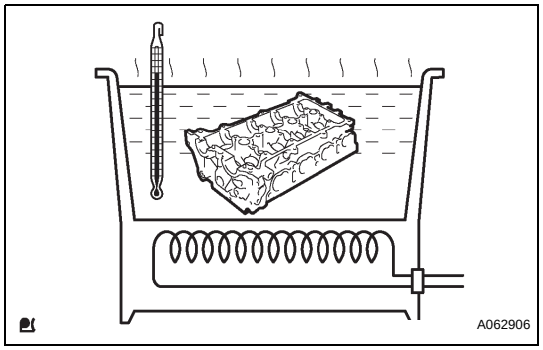

14. REPLACE VALVE GUIDE BUSHING

(a) Heat the cylinder head up to 80 to 100°C (176 to 212°F).

EM
cardiagn.com

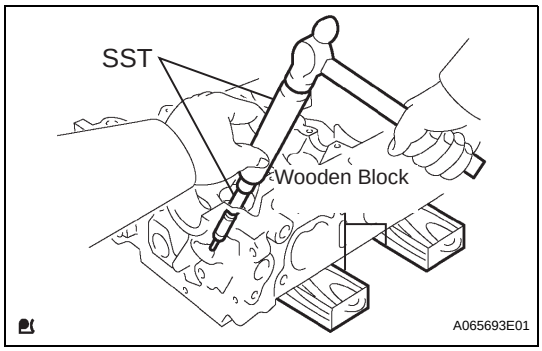

(b) Place the cylinder head on the wooden blocks.
(c) Using SST, tap out the valve guide bushing.
SST 09201-10000 (09201-01050), 09201-01055, 09950-70010 (09951-07100)

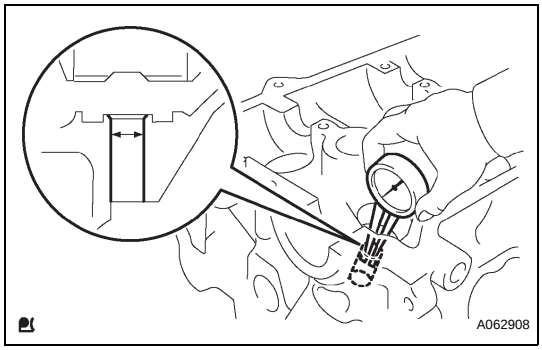

(d) Using a caliper gauge, measure the bushing bore diameter of the cylinder head.
Diameter:
10.285 to 10.306 mm (0.4049 to 0.4058 in.)
If the bushing bore diameter of the cylinder head is greater than 10.306 mm (0.4058 in.), machine the bushing bore to a dimension of 10.335 to 10.356 mm (0.4069 to 0.4077 in.) to install an oversize valve guide bushing.

Valve guide bushing size	Bushing bore diameter mm (in.)
STD	10.285 to 10.306 (0.4049 to 0.4058)
O/S 0.05	10.335 to 10.356 (0.4069 to 0.4077)

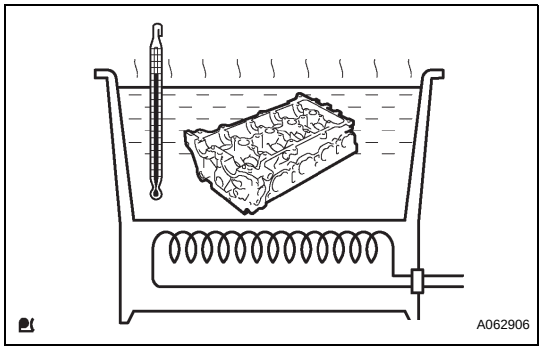

(e) Heat the cylinder head up to 80 to 100°C (176 to 212°F).

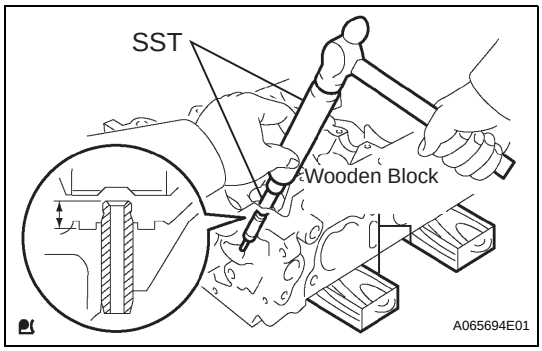

(f) Place the cylinder head on wooden blocks.
(g) Using SST, tap in a new valve guide bushing to the specified height.
SST 09201-10000 (09201-01050), 09201-01055, 09950-70010 (09951-07100)
Height:
8.7 to 9.1 mm (0.343 to 0.358 in.)

cardiagn.com

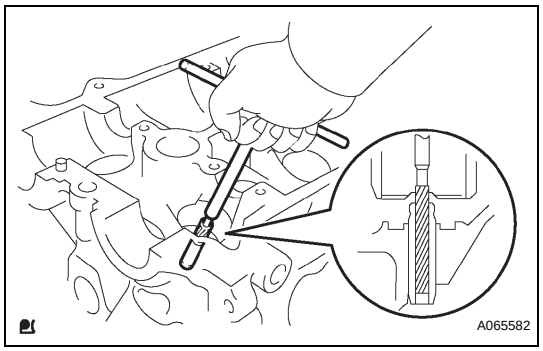

(h) Using a sharp 5.5 mm reamer, ream the valve guide bushing to the standard specified clearance.
Standard oil clearance

Item	Specification
Intake	0.025 to 0.060 mm (0.0010 to 0.0024 in.)
Exhaust	0.030 to 0.065 mm (0.0012 to 0.0026 in.)

REASSEMBLY

1. INSTALL STRAIGHT PIN

(a) Using a plastic hammer, install the new 2 straight pins.
Standard protrusion:
5 mm (0.197 in.)

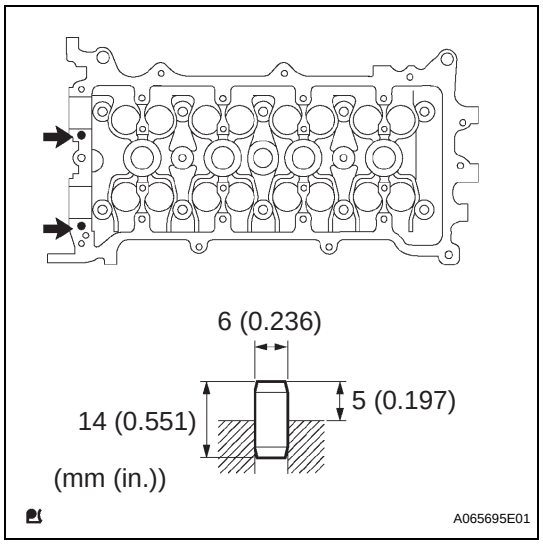

2. INSTALL UNION

(a) Mark the standard position away from the edge, onto the union with paint.

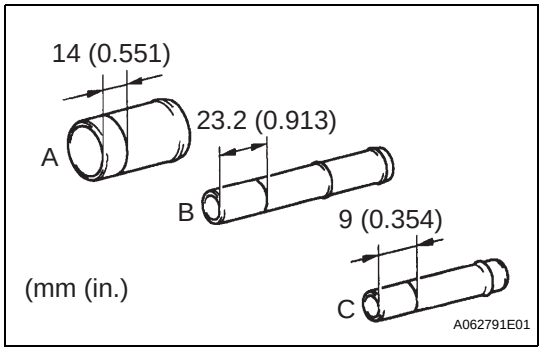

(b) Apply adhesive to the union hole of the cylinder head.
Adhesive:
Toyota Genuine Adhesive 1324, Three Bond 1324 or equivalent

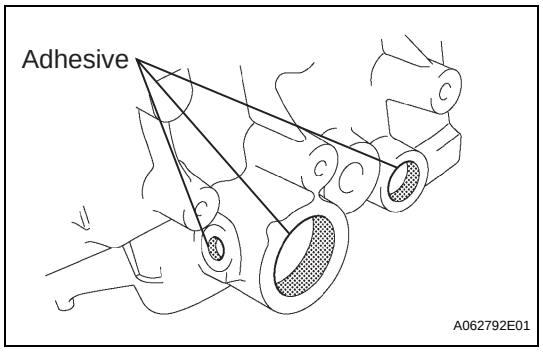

EM

cardiagn.com

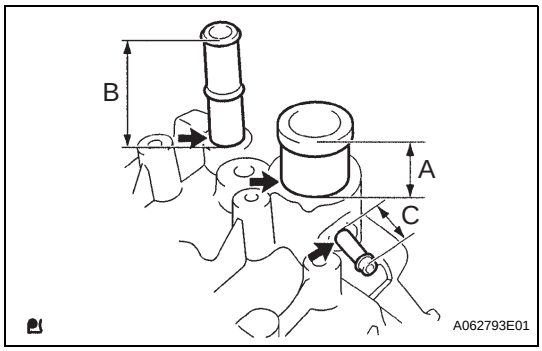

(c) Using a press, push in a new union until the standard marks come to the level of the cylinder head surface.

Standard protrusion

Item	Specification
A	29 mm (1.142 in.)
B	66.5 mm (2.618 in.)
C	24 mm (0.945 in.)

NOTICE:
- **Install the union within 3 minutes applying adhesive.**
- **Do not put in coolant at least for an hour after installation.**

EM

3. INSTALL STUD BOLT

(a) Using "TORX" socket wrenches E5 and E7, install the 11 stud bolts.

Torque

Item	Specification
A	9.5 N*m (97 kgf*cm, 84 in.*lbf)
B	5.0 N*m (51 kgf*cm, 44 in.*lbf)
C	5.0 N*m (51 kgf*cm, 44 in.*lbf)
D	9.5 N*m (97 kgf*cm, 84 in.*lbf)
E	9.5 N*m (97 kgf*cm, 84 in.*lbf)

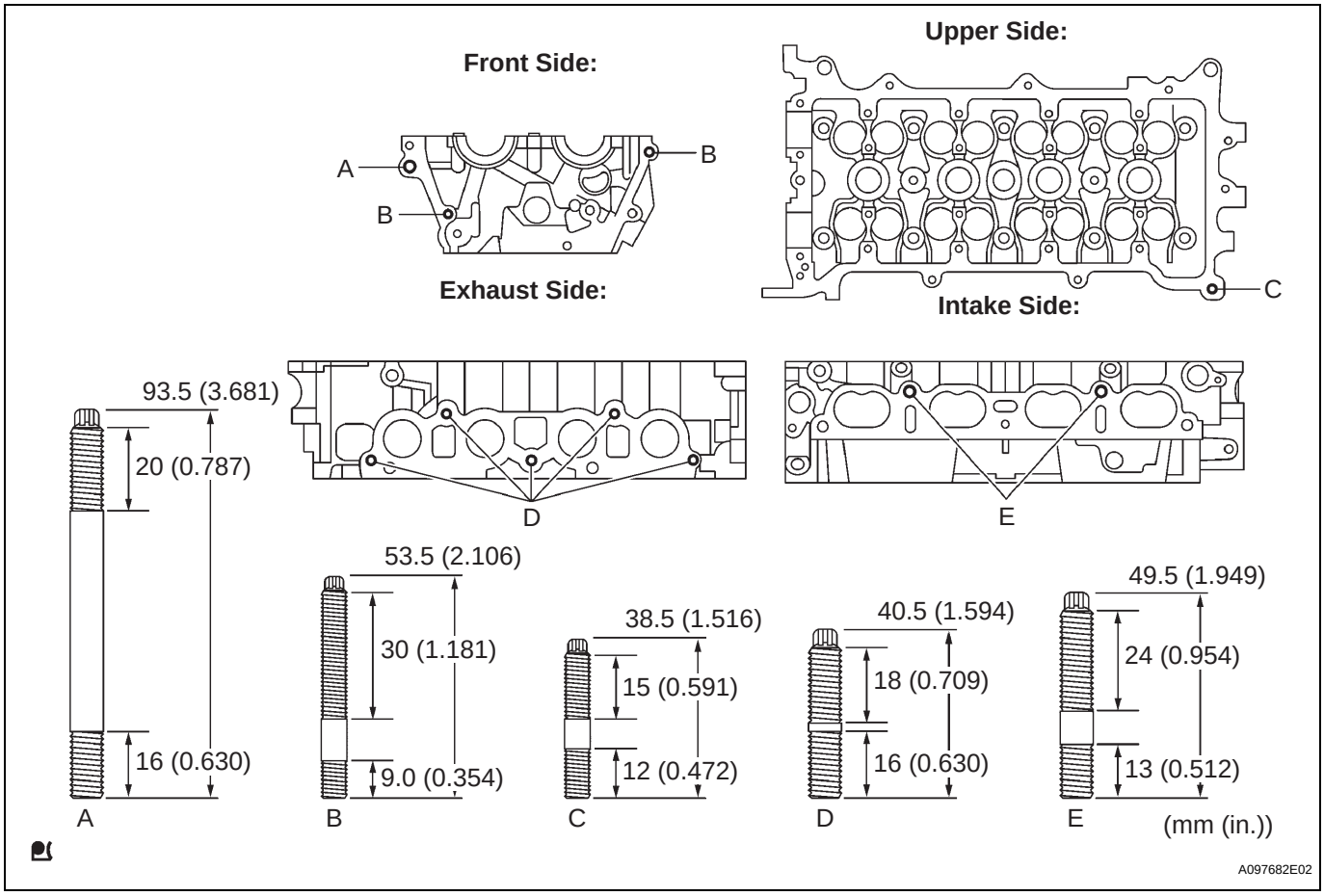

cardiagn.com

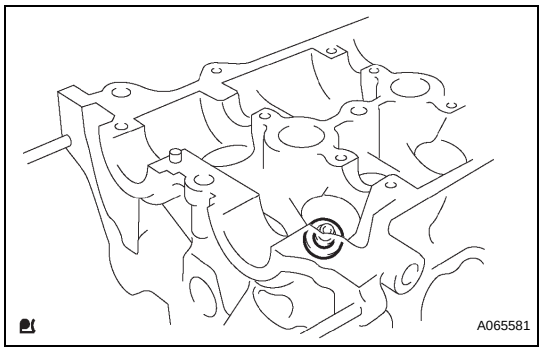

4. INSTALL VALVE SPRING SEAT

(a) Install the 16 spring seats onto the cylinder head.

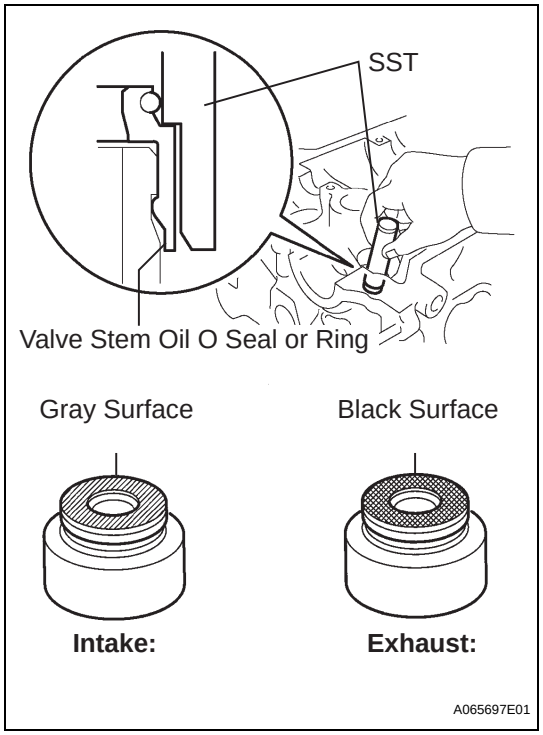

5. INSTALL VALVE STEM OIL O SEAL OR RING

(a) Apply a light coat of engine oil to a new valve stem oil seals.

NOTICE:

Be careful when assembling the oil seal of the intake and exhaust. Mixing them up may cause a failure.

HINT:

The intake valve stem oil seal is gray and exhaust valve stem oil seal is black.

(b) Using SST, push in the 16 oil seals by hand.

SST 09201-41020

6. INSTALL VALVE

HINT:

Remove all the valves from the cylinder head according to the procedure below.

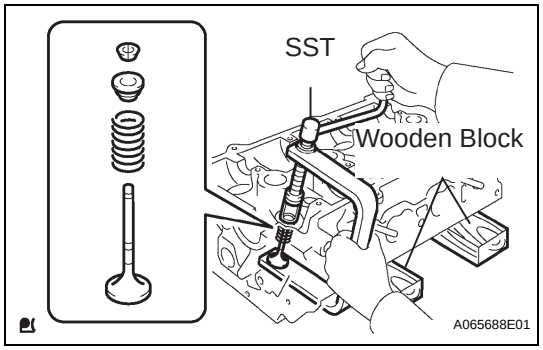

(a) Place the cylinder head on wooden blocks.

(b) Install the valve, spring and retainer onto the cylinder head.

(c) Using SST, compress the spring, and place the 2 retainer locks around the valve stem.

SST 09202-70020 (09202-00010, 09202-01010, 09202-01020)

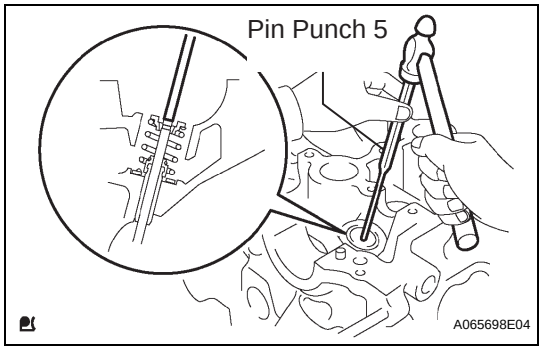

(d) Using a pin punch 5, lightly tap the valve stem tip to ensure a proper fit.

NOTICE:

Be careful not to damage the valve stem tip.

EM

cardiagn.com

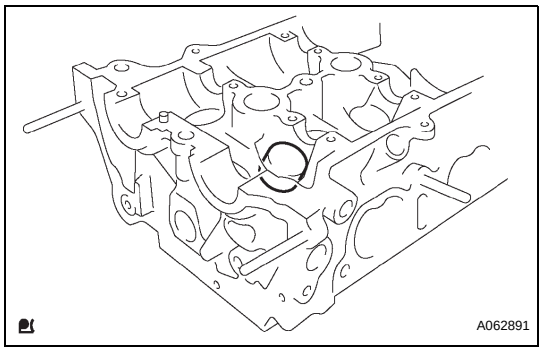

7. INSTALL VALVE LIFTER

(a) Apply a light coat of engine oil to the 16 valve lifters.

(b) Install the 16 valve lifters onto the cylinder head.

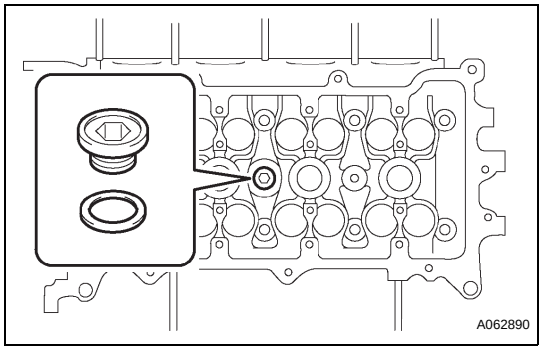

8. INSTALL W/HEAD TAPER SCREW PLUG NO.2

(a) Using a socket hexagon wrench 10 mm, install the taper screw plug with a new gasket.
Torque: 44 N*m (449 kgf*cm, 33 ft.*lbf)

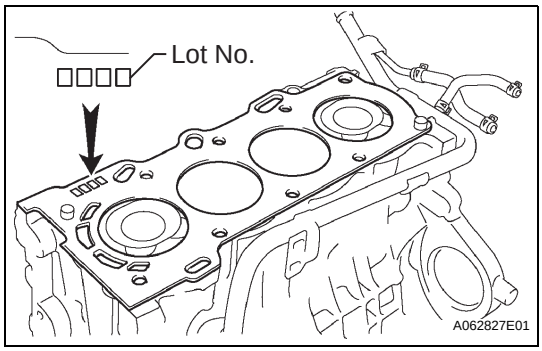

INSTALLATION

1. INSTALL CYLINDER HEAD GASKET

(a) Place a new cylinder head gasket on the cylinder block surface with the Lot No. stamp upward.
NOTICE:
- **Make sure that the cylinder head gasket is mounted in the correct direction.**
- **Place the cylinder head gently in order to avoid damaging the gasket.**

2. INSTALL CYLINDER HEAD SUB-ASSEMBLY

HINT:
The cylinder head bolts should be tightened in 2 successive steps.

(a) Apply a light coat of engine oil to the threads of the cylinder head bolts.

(b) Using several steps, uniformly install and tighten the 10 cylinder head bolts and plate washers with a bi-hexagon wrench 10 mm in the sequence shown in the illustration (Procedure "A").
Torque: 49 N*m (500 kgf*cm, 36 ft.*lbf)

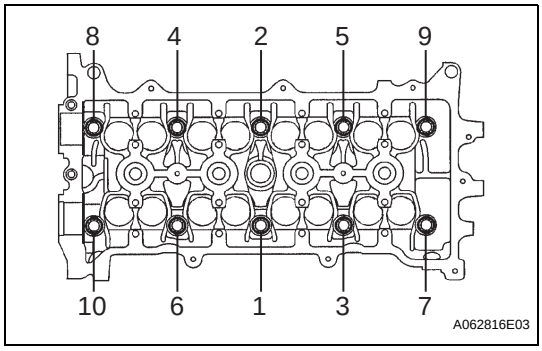

cardiagn.com

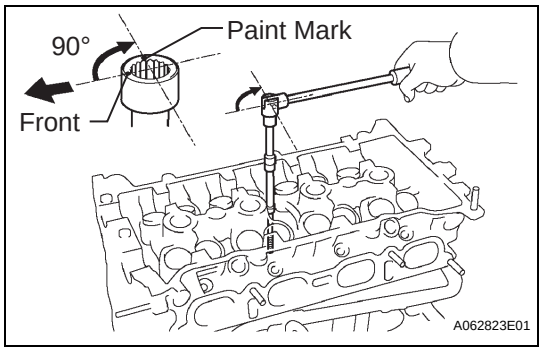

(c) Mark the front of the cylinder head bolts with paint.
(d) Retighten the cylinder head bolts 90° in the same sequence as procedure "A".
(e) Check that the paint mark of each bolt is at a 90° angle to the front.
(f) Install the water by-pass pipe No. 1 with the bolt.
Torque: 9.0 N*m (92 kgf*cm, 80 in.*lbf)
(g) Connect the heater inlet water hose.
(h) Connect the radiator hose inlet.
(i) Connect the engine wire.
(1) Connect the heated oxygen sensor connector.
(2) Install the clamp onto the clamp bracket.
(3) Connect the 2 engine earths.
Torque: 9.0 N*m (92 kgf*cm, 80 in.*lbf)
(4) Connect the radio setting condenser connector.
(5) Connect the engine coolant temperature sensor connector.
(6) Connect the camshaft position sensor connector.
(7) Connect the knock sensor connector.
(8) Connect the crankshaft position sensor connector.
(9) Connect the oil pressure switch connector.
(10) Connect the 4 fuel injector connectors.

3. CONNECT FUEL TUBE SUB-ASSEMBLY

(a) Connect the fuel tube sub-assembly (See page FU-14).

4. INSTALL CAMSHAFT

(a) Apply a light coat of engine oil to the camshaft journals.

(b) Place the 2 camshafts on the cylinder head as shown in the illustration.

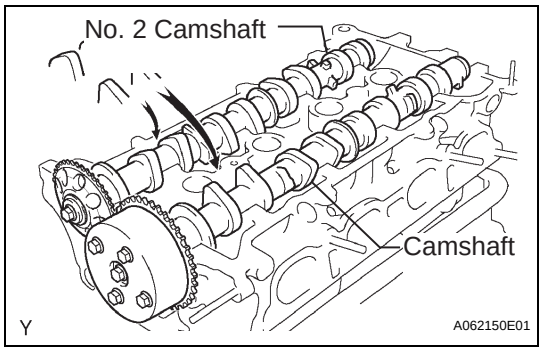

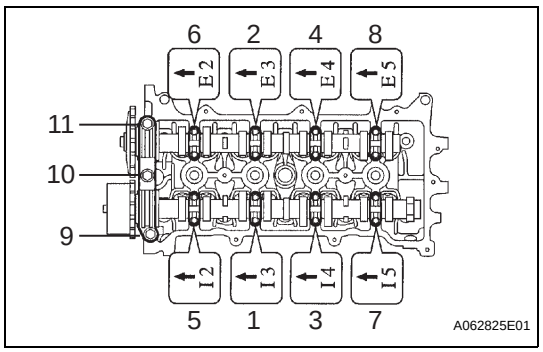

(c) Examine the front marks and numbers and check that the sequence order is as shown in the illustration. Then tighten the bolts.
Torque: Bearing cap No. 1
23 N*m (235 kgf*cm, 17 ft.*lbf)
Bearing cap No. 3
13 N*m (133 kgf*cm, 10 ft.*lbf)
HINT:
- Bearing cap No. 1 is used for bearings numbered from 9 to 11 in the illustration.
- Bearing cap No. 3 is used for bearings numbered from 1 to 8 in the illustration.

EM

cardiagn.com

5. INSTALL CAMSHAFT TIMING OIL CONTROL VALVE ASSEMBLY

(a) Apply a light coat of engine oil to a new O-ring, then install it onto the camshaft timing oil control valve.

(b) Install the camshaft timing oil control valve with the bolt.
Torque: 9.0 N*m (92 kgf*cm, 80 in.*lbf)

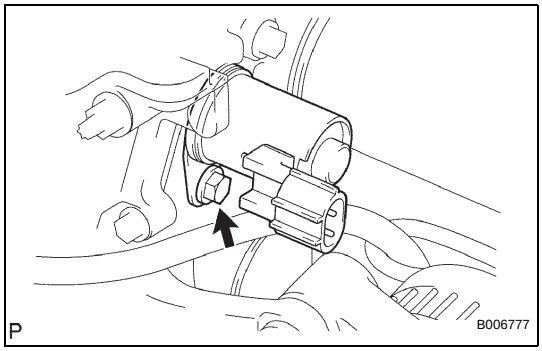

6. INSTALL INTAKE MANIFOLD

(a) Install a new gasket onto the intake manifold.

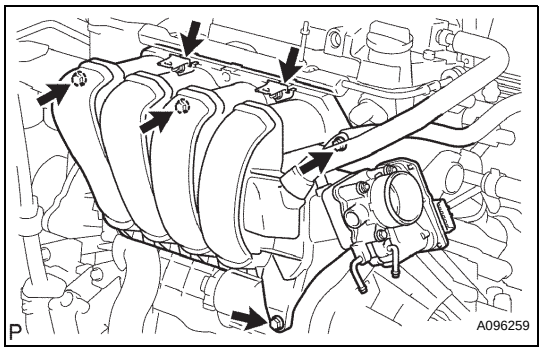

(b) Install the intake manifold and throttle body with the 2 brackets, 4 bolts and 2 nuts.
Torque: 30 N*m (306 kgf*cm, 22 ft.*lbf)

(c) Connect the union to check valve hose to the intake manifold.

(d) Connect the water by-pass hose No. 2 to the throttle body.

(e) Connect the water by-pass hose to the throttle body.

(f) Connect the throttle control motor connector.

(g) Install the 2 clamps of the engine wire onto the clamp bracket.

7. INSTALL OIL LEVEL GAGE SUB-ASSEMBLY

8. INSTALL AIR CLEANER HOSE NO.1

(a) Install the air cleaner hose No. 1 with the 2 hose clamp bolts.

(b) Connect the fuel vapor feed hose No. 3 to the VSV.

(c) Connect the fuel vapor feed hose No. 1 to the VSV.

(d) Install the clamp of the engine wire.

(e) Connect the VSV connector.

9. INSTALL CHAIN VIBRATION DAMPER NO.1

(a) Install the chain vibration damper No. 1 (See page LU-13).

10. INSTALL CHAIN SUB-ASSEMBLY

(a) Install the chain sub-assembly (See page EM-20).
SST 09223-22010

11. INSTALL CHAIN TENSIONER SLIPPER

(a) Install the chain tensioner slipper (See page EM-20).

12. INSTALL CRANKSHAFT POSITION SENSOR PLATE NO.1

(a) Install the crankshaft position sensor plate No. 1 (See page EM-20).

13. INSTALL TIMING CHAIN OR BELT COVER OIL SEAL

(a) Install the timing chain or belt cover oil seal (See page EM-20).
SST 09223-22010

cardiagn.com

14. INSTALL TIMING CHAIN OR BELT COVER SUB-ASSEMBLY

(a) Install the timing chain or belt cover sub-assembly (See page EM-20).

15. INSTALL CHAIN TENSIONER ASSEMBLY NO.1

(a) Install the chain tensioner assembly No. 1 (See page EM-20).

16. INSTALL CRANKSHAFT PULLEY

(a) Install the crankshaft pulley (See page EM-20).
SST 09960-10010 (09962-01000, 09963-01000)

17. INSTALL CRANKSHAFT POSITION SENSOR

(a) Install the crankshaft position sensor (See page EM-20).

18. INSTALL WATER PUMP ASSEMBLY

(a) Install the water pump assembly (See page CO-9).

19. INSTALL ENGINE MOUNTING BRACKET RH

(a) Install the engine mounting bracket RH (See page EM-20).

20. INSTALL V-RIBBED BELT TENSIONER ASSEMBLY

(a) Install the V-ribbed belt tensioner assembly (See page EM-20).

21. INSTALL CYLINDER HEAD COVER SUB-ASSEMBLY

(a) Install the cylinder head cover sub-assembly (See page EM-20).

22. INSTALL IGNITION COIL ASSEMBLY

(a) Install the ignition coil assembly (See page EM-20).

23. INSTALL ENGINE MOUNTING INSULATOR RH

(a) Install the engine mounting insulator RH (See page EM-20).

24. INSTALL GENERATOR ASSEMBLY

(a) Install the generator assembly (See page CH-14).

25. INSTALL VANE PUMP ASSEMBLY

(a) Install the vane pump assembly (See page PS-13).

26. INSTALL FAN AND GENERATOR V BELT

27. INSTALL MANIFOLD STAY

(a) Install the manifold stay (See page EX-3).

28. INSTALL EXHAUST PIPE ASSEMBLY FRONT

(a) Install the exhaust pipe assembly front (See page EX-3).

29. ADD ENGINE COOLANT

(a) Add the engine coolant (See page CO-5).

30. INSTALL BATTERY NEGATIVE TERMINAL
Torque: 5.4 N*m (55 kgf*cm, 48 in.*lbf)

31. INSPECT FOR ENGINE COOLANT LEAK

(a) Check for the engine coolant leakage (See page CO-1).

cardiagn.com

32. INSPECT FOR ENGINE OIL LEAK

33. INSPECT FOR FUEL LEAK

34. INSPECT FOR EXHAUST GAS LEAK

35. INSPECT IGNITION TIMING

(a) Inspect the ignition timing (See page EM-1).
SST 09843-18040

36. INSPECT ENGINE IDLING SPEED

(a) Inspect the engine idling speed (See page EM-1).

37. INSPECT COMPRESSION

(a) Inspect the compression (See page EM-1).
SST 09992-00500

38. INSPECT CO/HC

(a) Inspect the CO/HC (See page EM-1).

39. INSTALL CYLINDER HEAD COVER NO.2

(a) Install the cylinder head cover No. 2 (See page EM-20).

40. INSTALL ENGINE UNDER COVER RH

41. INSTALL FRONT WHEEL RH
Torque: 103 N*m (1,050 kgf*cm, 76 ft.*lbf)

cardiagn.com